1853942
Rhiannon Side Table-VT

Parts List

A.	Top Assembly	1 pc
B.	Stationary Shelf	1 pc
C.	Posts	4 pcs
D.	Legs	4 pcs
E.	Confirmat Screws	4 pcs
F.	Allen Head Wrench	1 pc

* Please make sure that you have all the parts indicated above before you begin assembly of this item.
* This item should be assembled on a soft surface to prevent scratching the finish during assembly.
* This item may require periodic tightening**.**

Assembly Instructions

1. **Attach Posts (C)** Insert the exposed threads of Legs (D) through the pre-drilled holes in the Stationary Shelf (B) into the pre-threaded holes in the Posts (C). Make sure the dowels in the Legs (D) insert into the pre-drilled holes in the Sationary Shelf (B) and the good finish side faces to the Posts (C). Tighten by turning the Posts (C) in a clockwise direction until the sides of the Posts (C) align with sides of the Legs (D). **Do not over tighten**. See Illustration #1.
2. **Attach Top Assembly (A)** Put the Top Assembly (A) upside down on a soft surface. Insert the Posts (C) into the gaps between apron and blocks. Make sure the pre-drilled holes in the blocks align with the pre-drilled holes in the Posts (C). Secure with Confirmat Screws (E) using Allen Head Wrench (F). See Illustration #2.

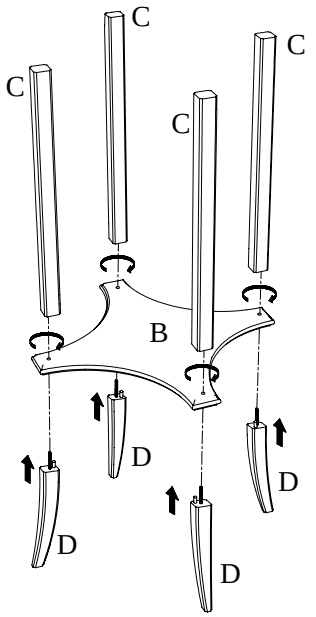

Illustration #1

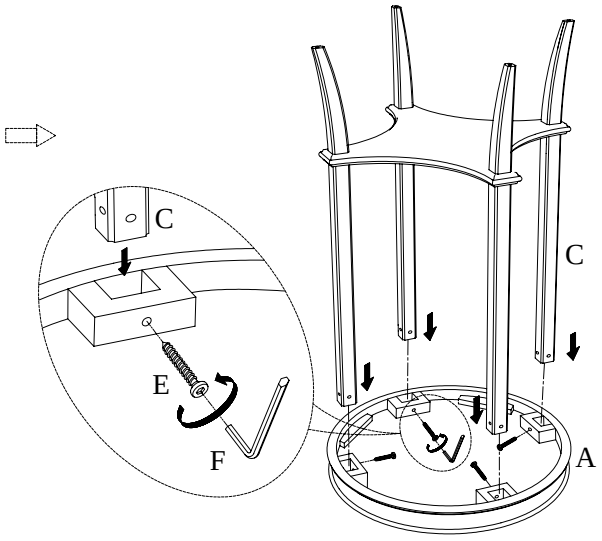

Illustration #2

R1-11-3-04